Technisches Datenblatt

O.01 6310

24/11/2026

HYDRAULISCHE ABKANTPRESSEN

Salvagnini Roboformer 135 ton x 4100 CNC

Marke: Salvagnini · Typ: Roboformer 135 ton x 4100 CNC







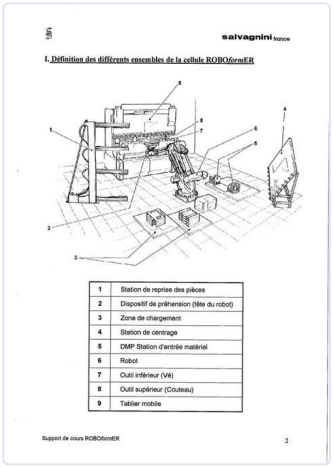



HYDRAULISCHE ABKANTPRESSEN

Kapazität	**135 Ton x 4000 mm**	Hinten anschlag	**(3) CNC**
Steuerung	**8 axes CNC**	Max Stossel	**250 mm**
Abstand zwichen Tisch -- Stössel	**540 mm**		

BESCHREIBUNG

Robotic Bendingcentre:

- automatic press-brake cell
- single controller
- single program

= simple, fast & automatic manufacturing from idea to finished product

KONTAKT

Dam-Apt BV
De Tonne 77 · 9800 Deinze · Belgien
Tel: +32 (0)9 386 15 71 · info@aptint.com
www.aptint.com · USt-IdNr. BE 0405.595.996

Scannen für das Online-Datenblatt

Pressbrake 8 axes controlled - type B2
bending speed: 20mm/sec
Robot: 6 axes controlled - Type H1 XL
max workpiece weight: 80 kg

Only 100 working hours!!!!

Userfriendly software:
- Metal Studio: 3D design program & to generate (automatically) punch & laser cutting programs
- Toolformer: management software for the tools with the possibility of importing drawings of new tools
- Camformer: software which automatically generates the optimal sequence of a productionprogram - the endresult of the process is shown in a video.

PREIS

Preis auf Anfrage

Angebot anfragen

KONTAKT

Dam-Apt BV
De Tonne 77 · 9800 Deinze · Belgien
Tel: +32 (0)9 386 15 71 · info@aptint.com
www.aptint.com · USt-IdNr. BE 0405.595.996

Scannen für das Online-Datenblatt