Technical datasheet

L.02 3539 *07

23/11/2026

CIRCULAR & ABRASIVE COLD SAWING MACHINES

Peddinghaus+Kaltenbach TDK 1000/9/E

Brand: Peddinghaus+Kaltenbach · Type: TDK 1000/9/E





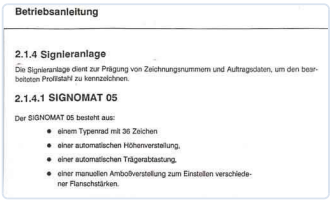

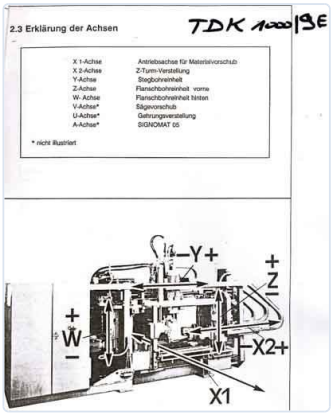

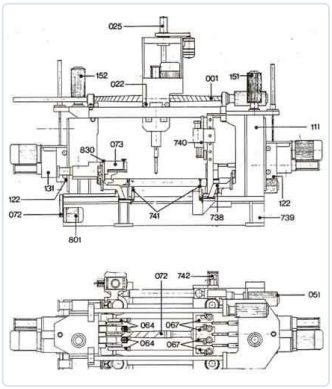

CIRCULAR & ABRASIVE COLD SAWING MACHINES

Dia saw / abrasive - disk	**1400 mm**	Power needed / motorpower	**11 kW**
Angle-input system (mitre)(number+°)	**L + R 60°**		

DESCRIPTION

SAWLINE Kaltenbach: Cap.: IPE 1000 mm Sawblade dia: 1400 mm Angles: L & R 60° DRILLINGLINE Peddinghaus CNC: 3 x 3 Drillingheads Max wide 1000mm Max height 500 mm Line Specially for H-beams +Marking Unit Signomat 05

PRICE

Price on request

Request a quote

CONTACT

Dam-Apt BV

De Tonne 77 · 9800 Deinze · Belgium

Tel: +32 (0)9 386 15 71 · info@aptint.com

www.aptint.com · VAT BE 0405.595.996

Scan for the online datasheet