APT INTERNATIONAL

Technical datasheet

O.21b 3539 *07

23/11/2026

CNC CENTER FOR PLATEPUNCHING, DRILLING, PLASMACUTTING AND MARKING

Peddinghaus+Kaltenbach TDK 1000/9/E

Brand: Peddinghaus+Kaltenbach · Type: TDK 1000/9/E





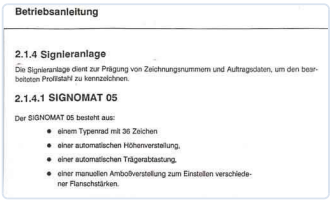

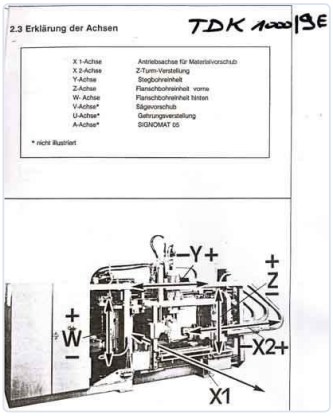

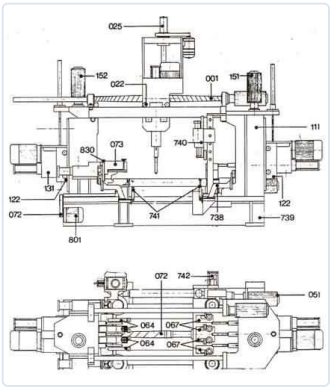

CNC CENTER FOR PLATEPUNCHING, DRILLING, PLASMACUTTING AND MARKING

Especially for	**Kaltenbach HDM1311/H/G/B**	Type CNC	**CNC Siemens**
Cap in first workarea : Longitudinal X	**IPE 1000 mm**	Crossdirection Y	**L & R 60°**
DRILLING UNIT	**Peddinghaus TDK 1000/9/E**	Dia capacity	**3x3**
Drillinghead ISO -- to ...	**MK4**		

DESCRIPTION

SAWLINE Kaltenbach: Sawblade dia: 1400 mm Angles: L & R 60° DRILLINGLINE Peddinghaus CNC: 3 x 3 Drillingheads Max wide 1000mm Max height 500 mm Line Specially for H-beams +Marking Unit Signomat 05

PRICE

Price on request

Request a quote

CONTACT

Dam-Apt BV

De Tonne 77 · 9800 Deinze · Belgium

Tel: +32 (0)9 386 15 71 · info@aptint.com

www.aptint.com · VAT BE 0405.595.996

Scan for the online datasheet