Technical datasheet

A.14 1341 *04

23/11/2026

LONGSPINDLE & SPINDLE AUTOMATICS

Schutte AF 32 16/6

Brand: Schutte · Type: AF 32 16/6





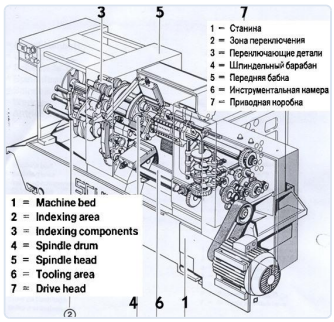



LONGSPINDLE & SPINDLE AUTOMATICS

Number of spindles	**6**	Diametre of spindle bore	**32 mm**
Power needed	**220 V**		

DESCRIPTION

Draadfreesapparaat -- Draadsnijapparaat -- Draadtap -- 2 Kopfrezen Kamersnijapparaat Spantangen dia : 16, 20, 24, 25, 27, 28, 32 Spantangen voor zeskant : 17, 19, 21, 23, 24, 25, 26, 27,

PRICE

Price on request

Request a quote

CONTACT

Dam-Apt BV

De Tonne 77 · 9800 Deinze · Belgium

Tel: +32 (0)9 386 15 71 · info@aptint.com

www.aptint.com · VAT BE 0405.595.996

Scan for the online datasheet