APT INTERNATIONAL

Technical datasheet

C.02 10394

28/11/2026

RADIAL DRILLING MACHINES

Kovosvit VRM 50A

Brand: Kovosvit · Type: VRM 50A









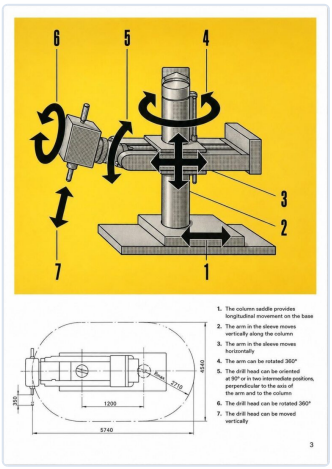

RADIAL DRILLING MACHINES

Admission in drilling-spindle (morse)	**Mk 5**	Max drilling capacity	**50 mm**
Longitudinal travel drilling-head (X-axis)	**1200 mm**	Height-travel arm (Y-axis)	**1250 mm**
Min dist. round column--drillingsp (X-axis)	**1170 mm**	Max dist.round column -- drillingspindle	**2070 mm**
Dia spindle	**70/75 mm**	Max drilling-depth	**350 mm**
Speeds	**16 > 800 rpm**	Power on the spindle	**4 kW**
Width	**6,5 ton**		

DESCRIPTION

CONTACT

Dam-Apt BV

De Tonne 77 · 9800 Deinze · Belgium

Tel: +32 (0)9 386 15 71 · info@aptint.com

www.aptint.com · VAT BE 0405.595.996

Scan for the online datasheet

Column can turn 360°

Length: 3450 mm

Width: 1720 mm

Height: 2970 mm

PRICE

Price on request

Request a quote

CONTACT

Dam-Apt BV

De Tonne 77 · 9800 Deinze · Belgium

Tel: +32 (0)9 386 15 71 · info@aptint.com

www.aptint.com · VAT BE 0405.595.996

Scan for the online datasheet