Technical datasheet

G.01 5193

23/11/2026

SURFACE GRINDERS WITH VERTICAL SPINDLE

Dorries Scharmann VCCS 1500/100S

Brand: Dorries Scharmann · Type: VCCS 1500/100S



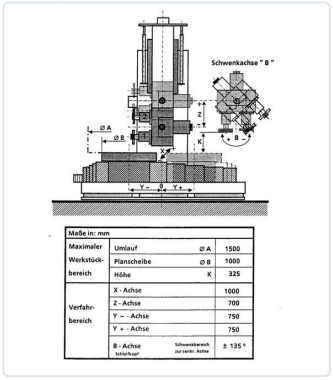







SURFACE GRINDERS WITH VERTICAL SPINDLE

Table longitudinal travel X-axis	**1060 mm**	Table cross-travel Z-axis	**1500 mm**
Max height workpiece	**800 mm (Z: 900mm)**	Motorpower	**45 kW**
Tension needed	**160 kW**	Length	**9000 mm**
Depth	**7500 mm**	Height	**4500 mm**
Weight	**35000**		

DESCRIPTION

5 axis simultaneous controlled Vertical grinding machine

The new grinding machine generation sets the pace in high-precision machining. It guarantees to provide a sustainable competitive edge. In the grinding sector, the product-line is especially suitable for high-precision machining in industries as e.g. bearing industry or aerospace sector, where extreme high accuracy are the basic demands.

- manufacturing of bearing
- manufacturing of machines for civil construction
- gas- and steam turbines
- components from the aerospace industry
- general engineering, printing machines and machine tools
- C = Table 0,001 ° Positioning (Indexable rotating table)
- Table speeds 0.005 -> 50 rpm
- Power on table: 13 kW

CONTACT

Dam-Apt BV
De Tonne 77 · 9800 Deinze · Belgium
Tel: +32 (0)9 386 15 71 · info@aptint.com
www.aptint.com · VAT BE 0405.595.996

Scan for the online datasheet

- X = 1060 mm
- Y = 950 mm
- Z = 1500 mm
- movement speed: 0.01 -> 7000mm/min
- Grinding spindle power 45 kW
- Ø 230 mm
- Speeds 1500 – 8000 Rpm
- Angle Support L + R 135°
- Total power 160 kW
- Equipped with Palletchangersystem

PRICE

Price on request

Request a quote

CONTACT

Dam-Apt BV

De Tonne 77 · 9800 Deinze · Belgium

Tel: +32 (0)9 386 15 71 · info@aptint.com

www.aptint.com · VAT BE 0405.595.996

Scan for the online datasheet