APT INTERNATIONAL

Scheda tecnica

A.12 5193

23/11/2026

TORNI VERTICALI, TRADIZIONALI E CNC

Dorries Scharmann VCCS 1500/100S

Marca: Dorries Scharmann · Tipo: VCCS 1500/100S



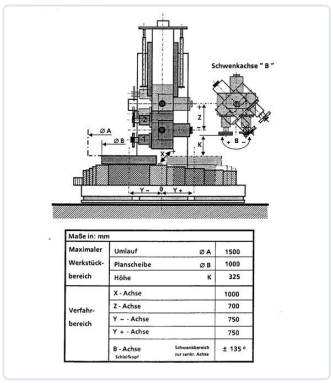







TORNI VERTICALI, TRADIZIONALI E CNC

Diametro del mandrino	**1060 mm**	Diametro di tornitura max - passaggio	**1500 mm**
Potenza sul mandrino principale	**45 kW Grinding spindle**	Altezza massima del pezzo (asse Z)	**800 mm (Z: 900mm)**
Controllo	**Siemens 880G 5 axes**	Velocità	**2000 -> 9000 rpm**
Potenza di collegamento richiesta	**160 kW**	Lunghezza	**9000 mm**
Larghezza	**7500 mm**	Altezza	**4500 mm**
Peso	**35.000 kg**		

DESCRIZIONE

5 axis simultaneous controlled Vertical grinding machine

The new grinding machine generation sets the pace in high-precision machining. It guarantees to provide a sustainable competitive edge. In the grinding sector, the product-line is especially suitable for high-precision machining in industries as e.g. bearing industry or aerospace sector, where extreme high accuracy are the basic demands.

- manufacturing of bearings

CONTATTI

Dam-Apt BV

De Tonne 77 · 9800 Deinze · Belgio

Tel: +32 (0)9 386 15 71 · info@aptint.com

www.aptint.com · P. IVA BE 0405.595.996

Scansiona per la scheda online

- manufacturing of machines for civil construction
- gas- and steam turbines
- components from the aerospace industry
- general engineering, printing machines and machine tools
- C = Table 0,001 ° Positioning (Indexable rotating table)
- Table speeds 0.005 -> 50 rpm
- Power on table: 13 kW
- X = 1060 mm
- Y = 950 mm
- Z = 1500 mm
- movement speed: 0.01 -> 7000mm/min
- Grinding spindle power 45 kW
- Ø 230 mm
- Speeds 1500 – 8000 Rpm
- Angle Support L + R 135°
- Total power 160 kW
- Equipped with Palletchangersystem

PREZZO

Prezzo su richiesta

Richiedi un preventivo

CONTATTI

Dam-Apt BV

De Tonne 77 · 9800 Deinze · Belgio

Tel: +32 (0)9 386 15 71 · info@aptint.com

www.aptint.com · P. IVA BE 0405.595.996

Scansiona per la scheda online