# Technische fiche

**G.01 5193**

23/11/2026

VLAKSLIJPMACHINES MET VERTIKALE SPIL

# Dorries Scharmann VCCS 1500/100S

Merk: Dorries Scharmann · Type: VCCS 1500/100S




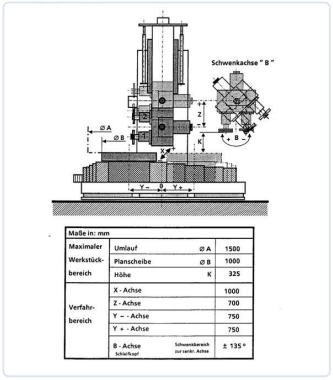








## VLAKSLIJPMACHINES MET VERTIKALE SPIL

| | | | |
|---|---|---|---|
| Langsverplaatsing tafel (X-as) | **1060 mm** | Dwarsverplaatsing kop (Z-as) | **1500 mm** |
| Max hoogte werkstuk | **800 mm (Z: 900mm)** | Motorvermogen | **45 kW** |
| Aansluitspanning | **160 kW** | Lengte | **9000 mm** |
| Breedte | **7500 mm** | Hoogte | **4500 mm** |
| Gewicht | **35000** | | |

## BESCHRIJVING

5 axis simultaneous controlled Vertical grinding machine

The new grinding machine generation sets the pace in high-precision machining. It guarantees to provide a sustainable competitive edge. In the grinding sector, the product-line is especially suitable for high-precision machining in industries as e.g. bearing industry or aerospace sector, where extreme high accuracy are the basic demands.

- manufacturing of bearing
- manufacturing of machines for civil construction
- gas- and steam turbines
- components from the aerospace industry
- general engineering, printing machines and machine tools
- C = Table 0,001 ° Positioning (Indexable rotating table)
- Table speeds 0.005 -> 50 rpm
- Power on table: 13 kW

## CONTACT

**Dam-Apt BV**
De Tonne 77 · 9800 Deinze · België
Tel: +32 (0)9 386 15 71 · info@aptint.com
www.aptint.com · BTW BE 0405.595.996

Scan voor de online fiche

- X = 1060 mm
- Y = 950 mm
- Z = 1500 mm
- movement speed: 0.01 -> 7000mm/min
- Grinding spindle power 45 kW
- Ø 230 mm
- Speeds 1500 – 8000 Rpm
- Angle Support L + R 135°
- Total power 160 kW
- Equipped with Palletchangersystem

PRIJS

**Prijs op aanvraag**

**Vraag een offerte aan**


**CONTACT**

**Dam-Apt BV**

De Tonne 77 · 9800 Deinze · België

Tel: +32 (0)9 386 15 71 · info@aptint.com

www.aptint.com · BTW BE 0405.595.996


Scan voor de online fiche